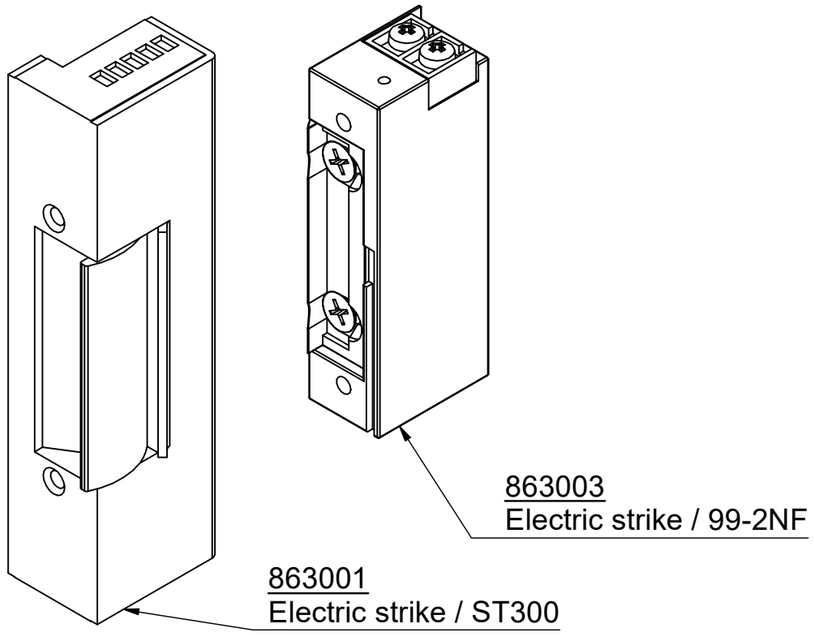

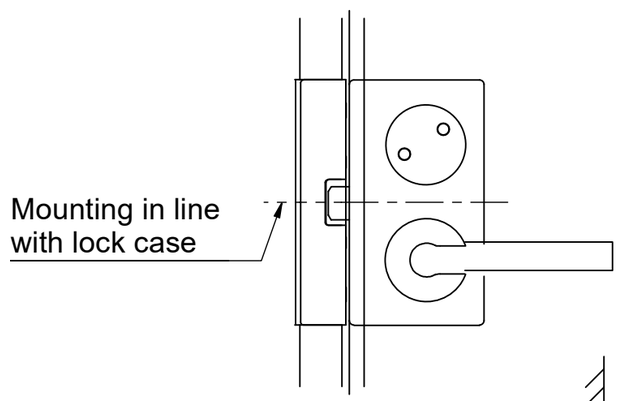

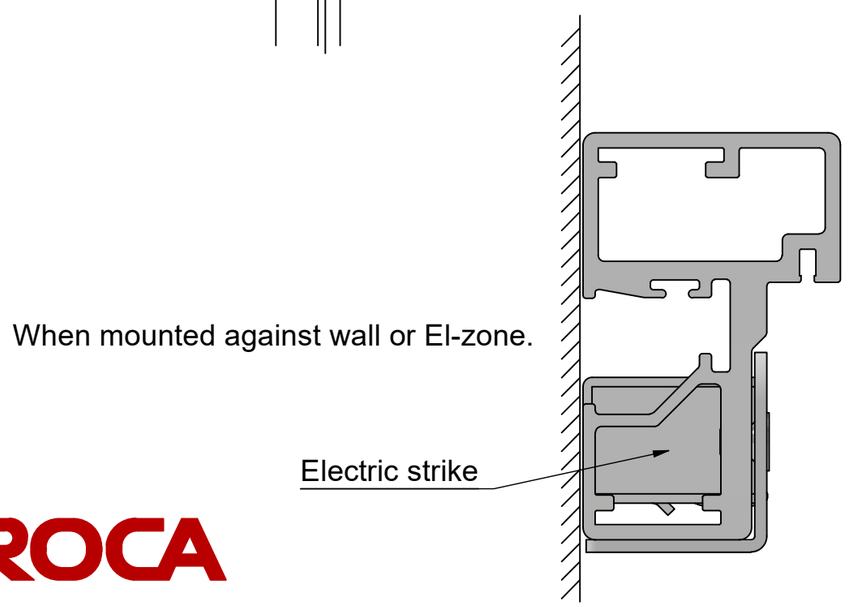

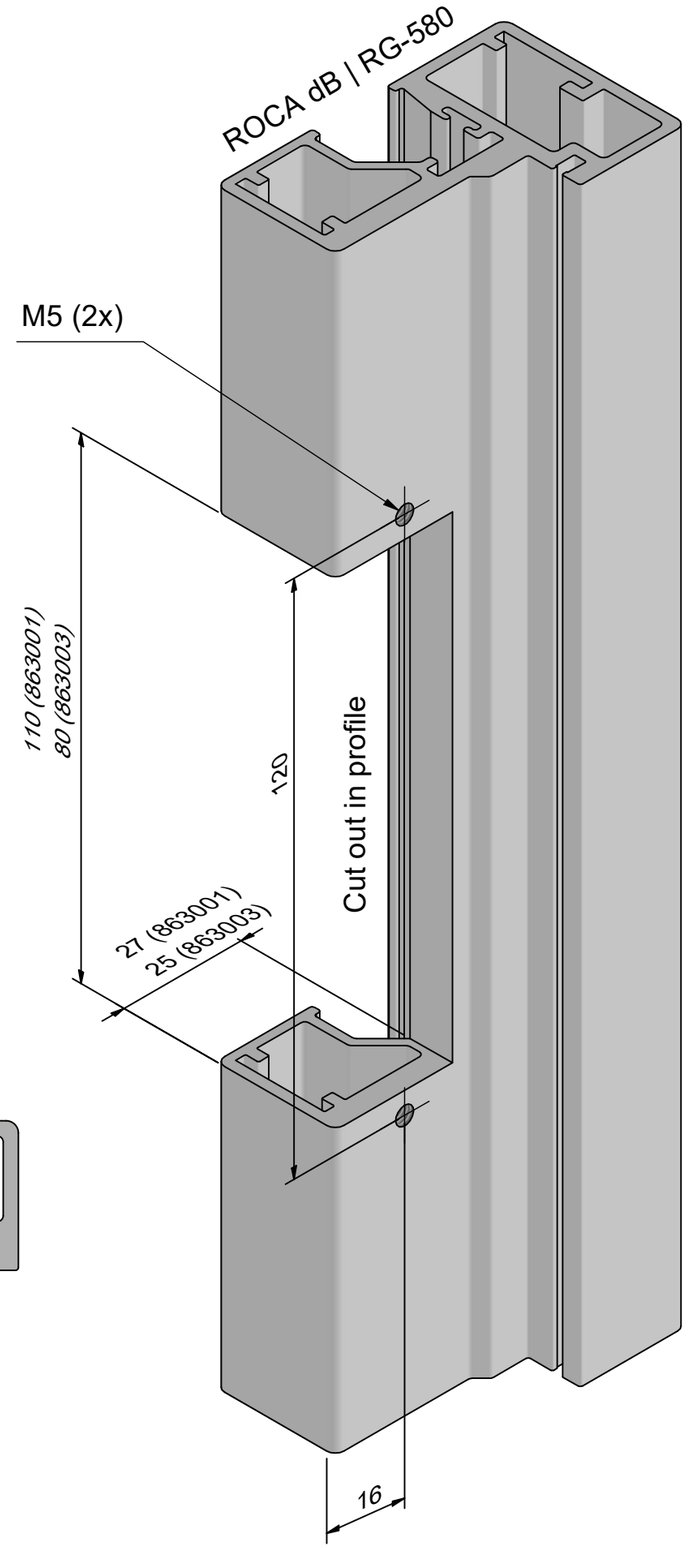

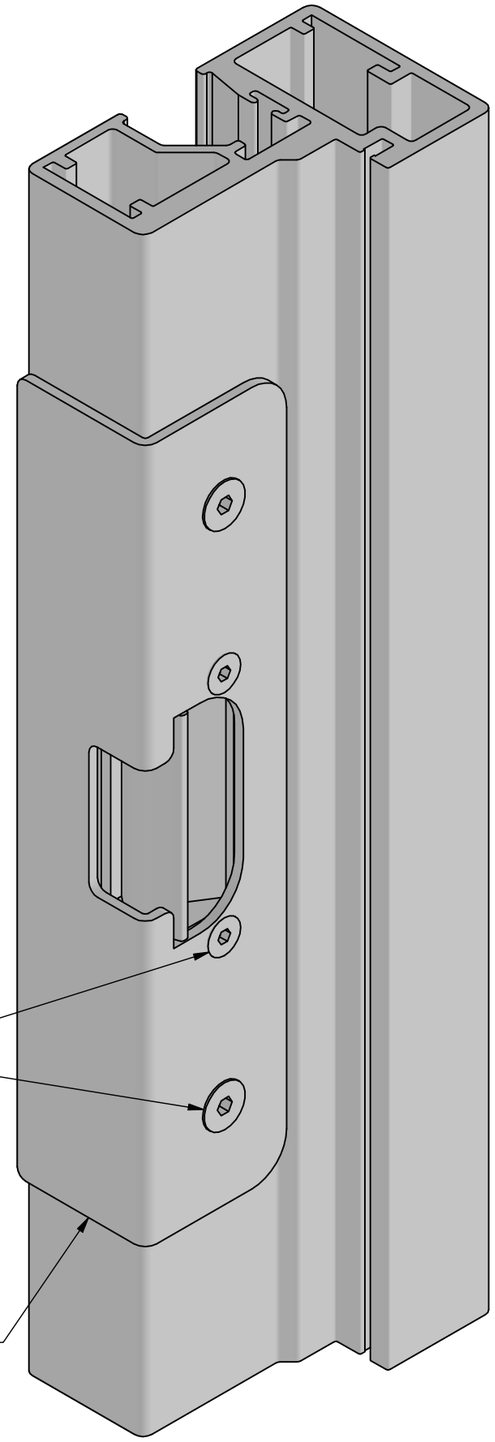

ROCA

Plate & screws for electric strike	Date V4 240215/AC
Description **RG-590**	Item no. **863002**