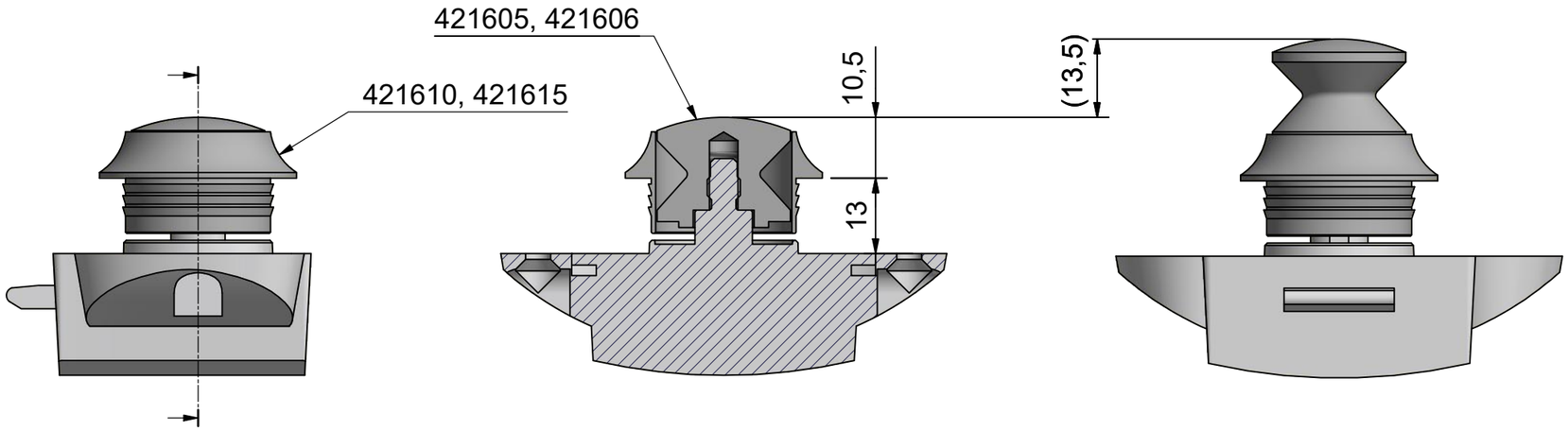

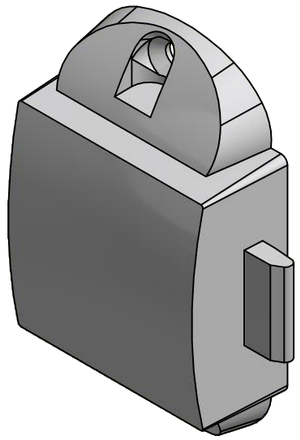

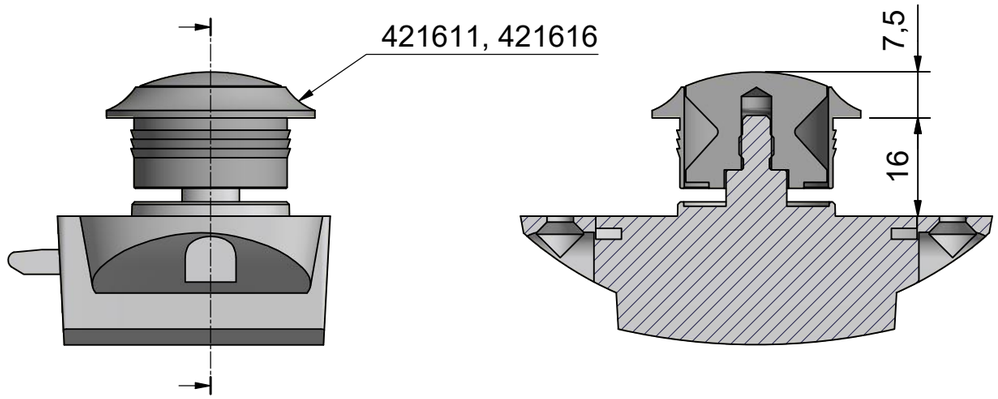

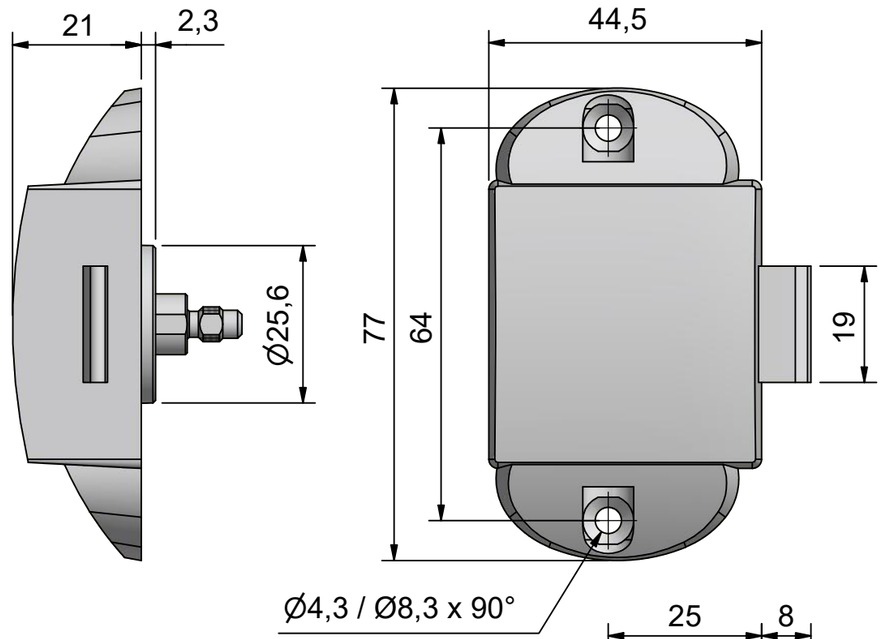

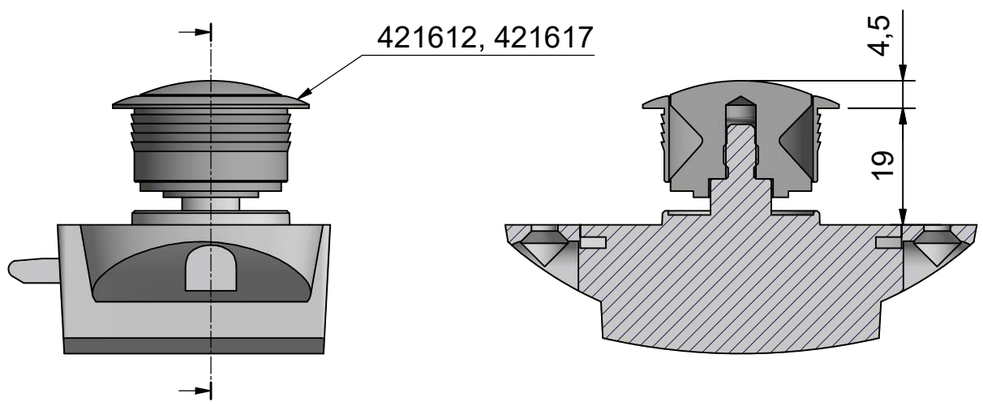

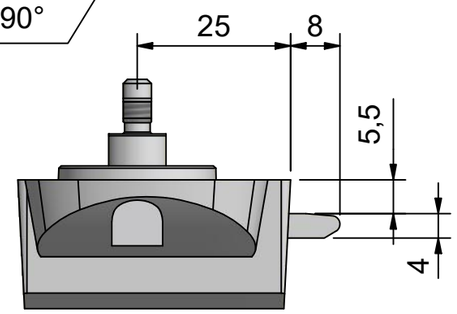

Item no.	Material	Color
421530	Plastic/Zamac	Chrome plated
421531	Plastic/Zamac	Brown
421534	Plastic Zamac	White

Plastic / Zamac

Date: V2 210212/LW

Description: **Push lock + ring and knob**

Item no.: **421530-34**