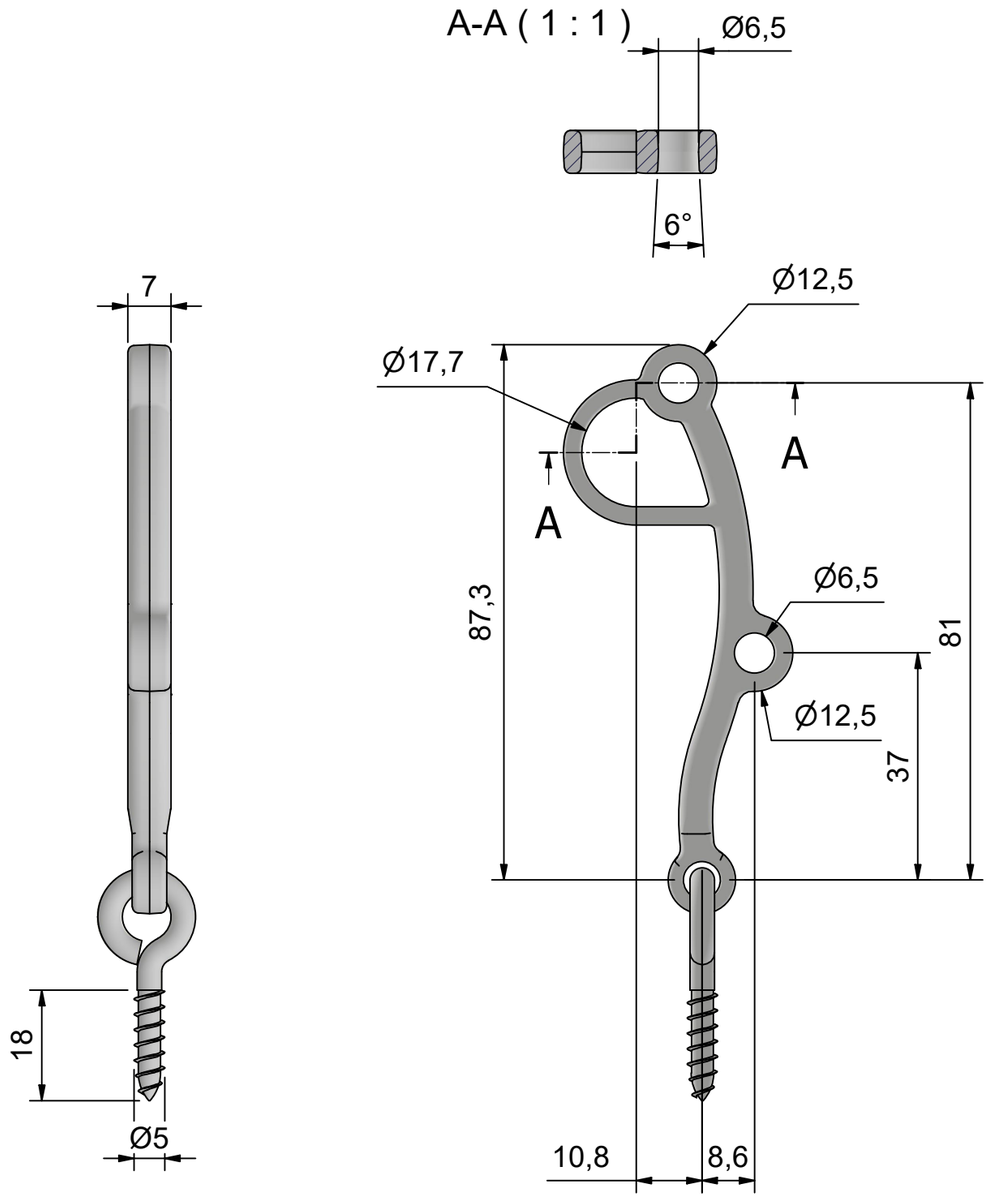

Table	
Item no.	Surface treatment
911340	Nickel plated
911341	Brass plated
911342	Dull nickel plated

ROCA

www.rocaindustry.com

Zamac	Date 230504/dle
Description **Storm hook Allmoge**	Item no. **911340-2**