A3

## 3 Position switch
2 Speed / Parking

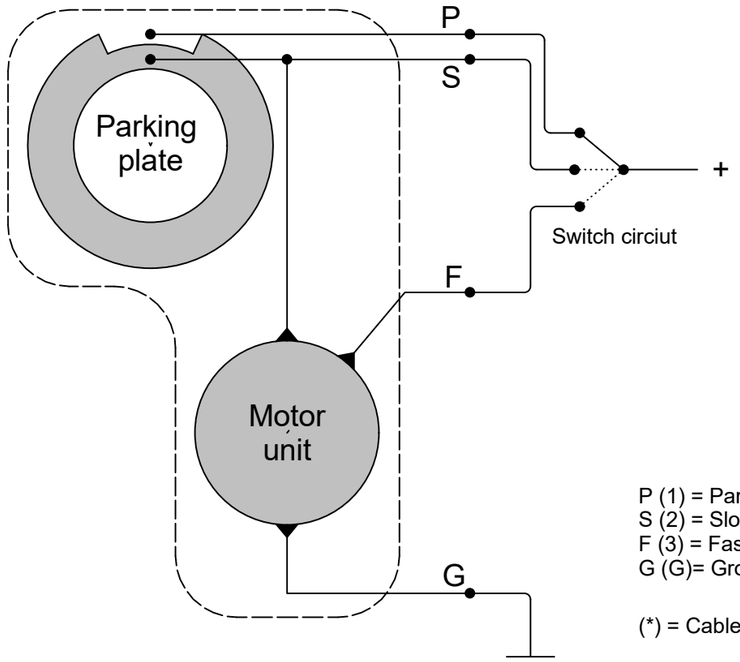


P (1) = Parking
S (2) = Slow
F (3) = Fast
G (G)= Ground

(*) = Cable mark for W10 motors

## Carling switch (3 position)
2 Speed / Parking

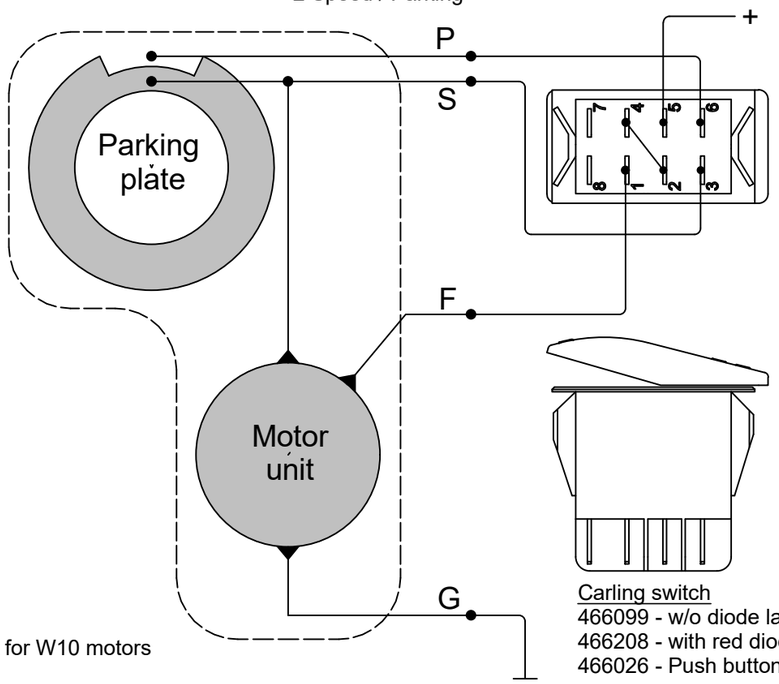




Carling switch
466099 - w/o diode lamp
466208 - with red diode lamp
466026 - Push button

## On/Off switch
Slow Speed / Parking

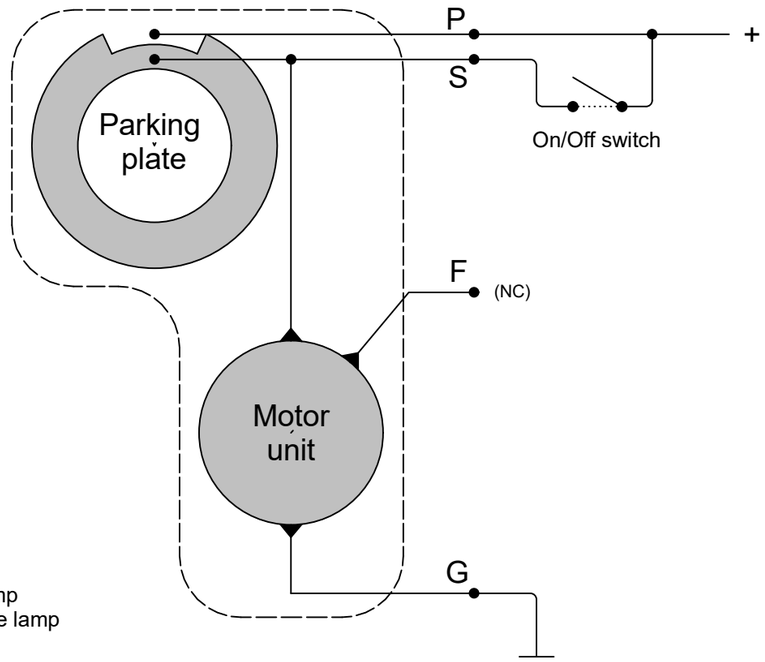


## 1 switch (3 position) with 2 or more motors
2 Speed / Parking / No sync

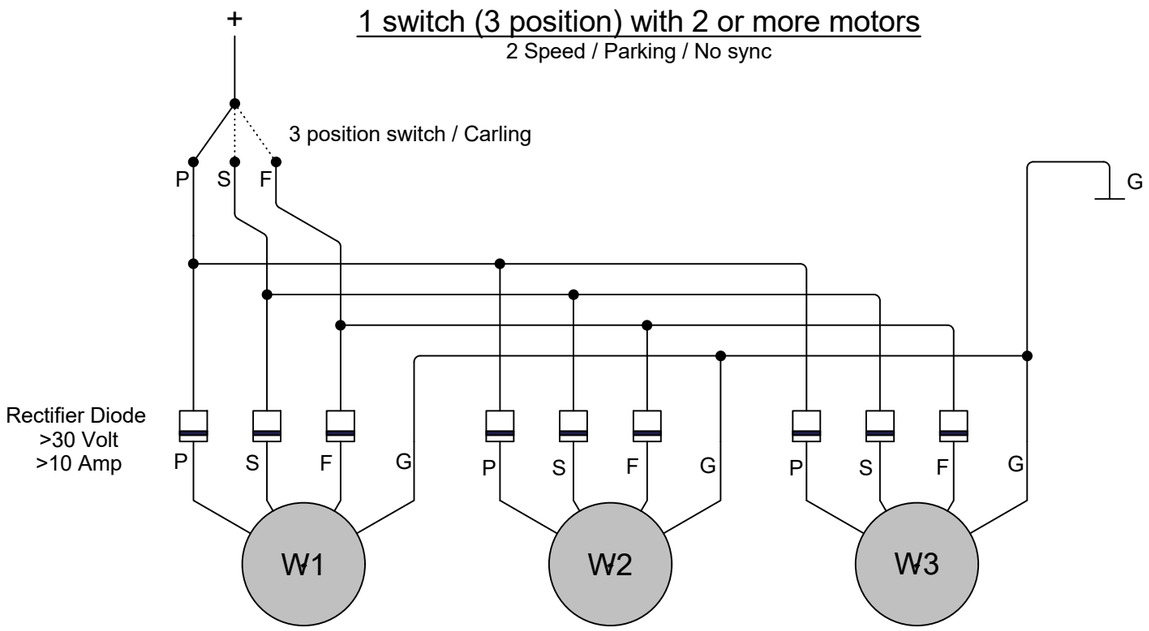


## 1 switch (On/Off) with 2 or more motors
Slow speed / Parking / No sync

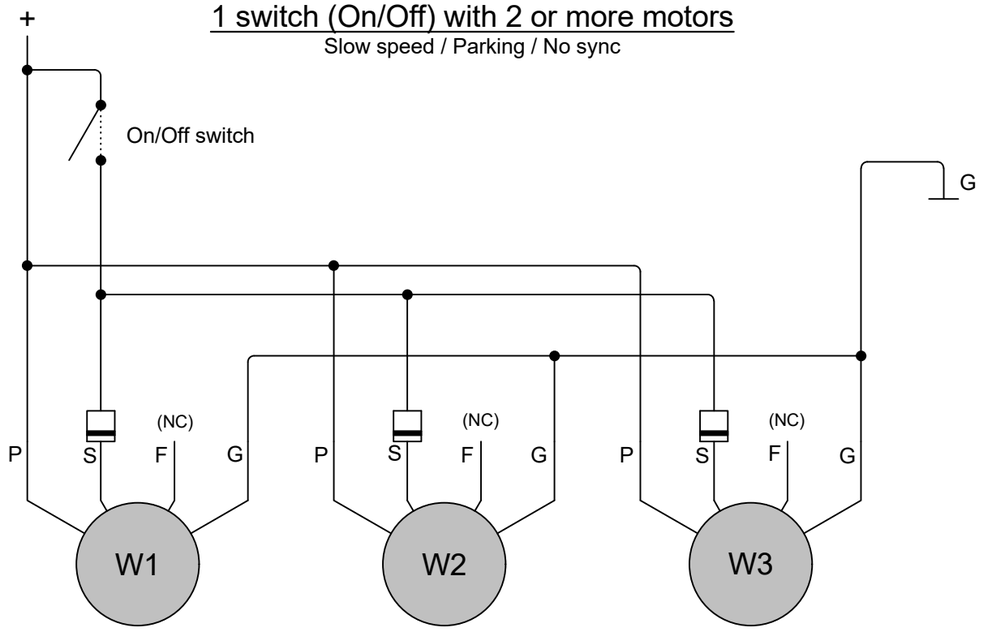


| | |
|---|---|
| Date | 170907/LW |
| Name: **Wiring diagram** | Item no.: **W10 - 12** |